Date:	Company:
SSL Branch:	Job Name:
SSL Sales Person:	Purchase Order:

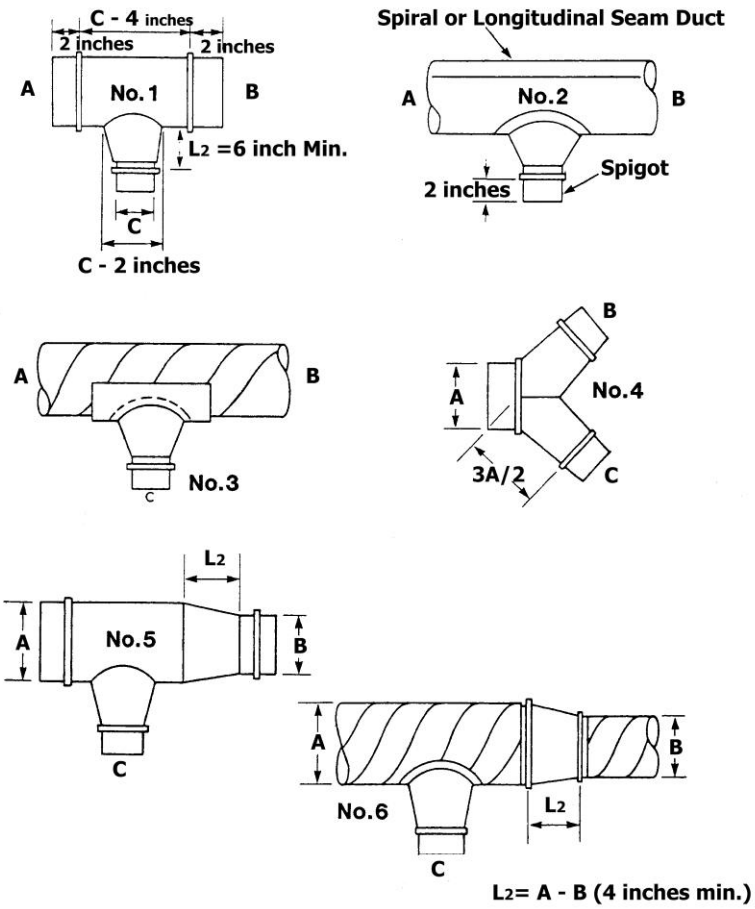

Conical Tee Fittings Order Form

1. Conical Tee Fitting
2. Conical Tap
3. Conical Saddle Tap
4. Wye Fitting
5. Conical Tee & Reducer
6. Alternate Arrangement

FDS0507

Number and Description	Qty.	A	B	C